© 2020 SEED LIGHTING DESIGN CO., LTD

matt black + copper + oak

Measurement : centimeter / inches

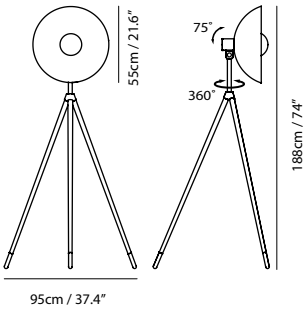


**Apollo Floor**

**Model**
SLD-3655MFTE

**Material**
aluminum, oak

**Light Source**
LED 17W 2700K CRI 90 1210lm

**Feature**
Oak tripod, Touch dimmer

**Driver**
Built-in dimmable driver

**Weight**
8.8kg /19.4lb

**Color**
matt black + copper

© 2020 SEED LIGHTING DESIGN CO., LTD